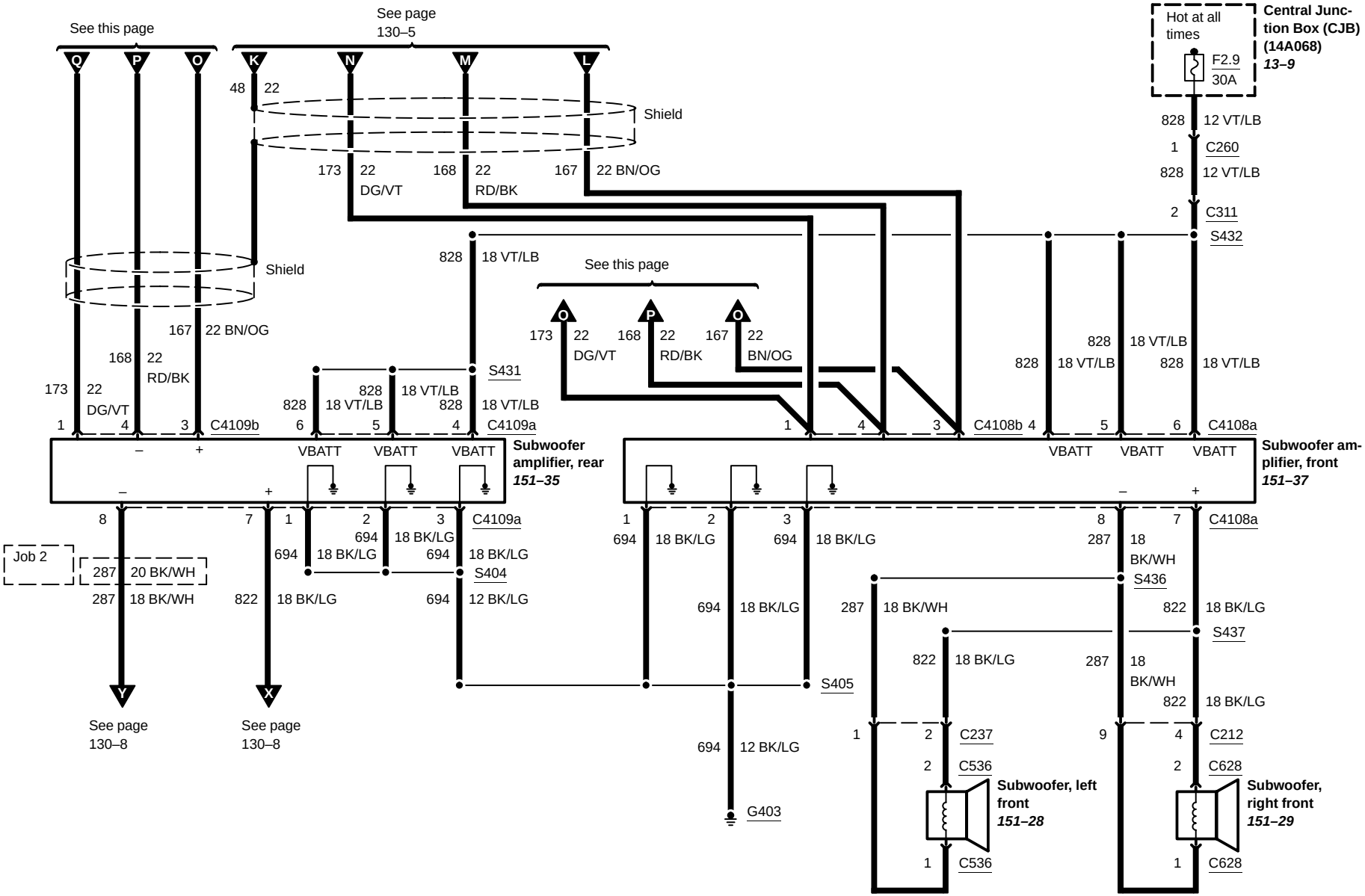Mach 1000, Convertible